15F4820

Passenger Stair



Building Quality Ground Support Products Since 1961

- Fully Galvanized version of our popular 15F2820
- Operation Height: 88” - 161”
- Platform size: 79” x 63.5”
- Step width: 48”
- Swivel platform bumper adjusts +/- 5 deg.
- Adjustable platform height using hand pump
- Modesty panels on all steps and platform handrails
- Battery powered LED lighting system with adjustable timer
- Onboard battery charger
- Battery level indicator
- Stabilizer jacks
- Sliding handrails to clear aircraft door
- Non-marring soft rubber bumpers

Clyde Machines
P.O. Box 194
1150 Hwy 55 N.
Glenwood, MN 56334 USA
(320) 634-4504
(320) 634-4506 Fax

www.clydemachines.com

15F4820

Passenger Stair

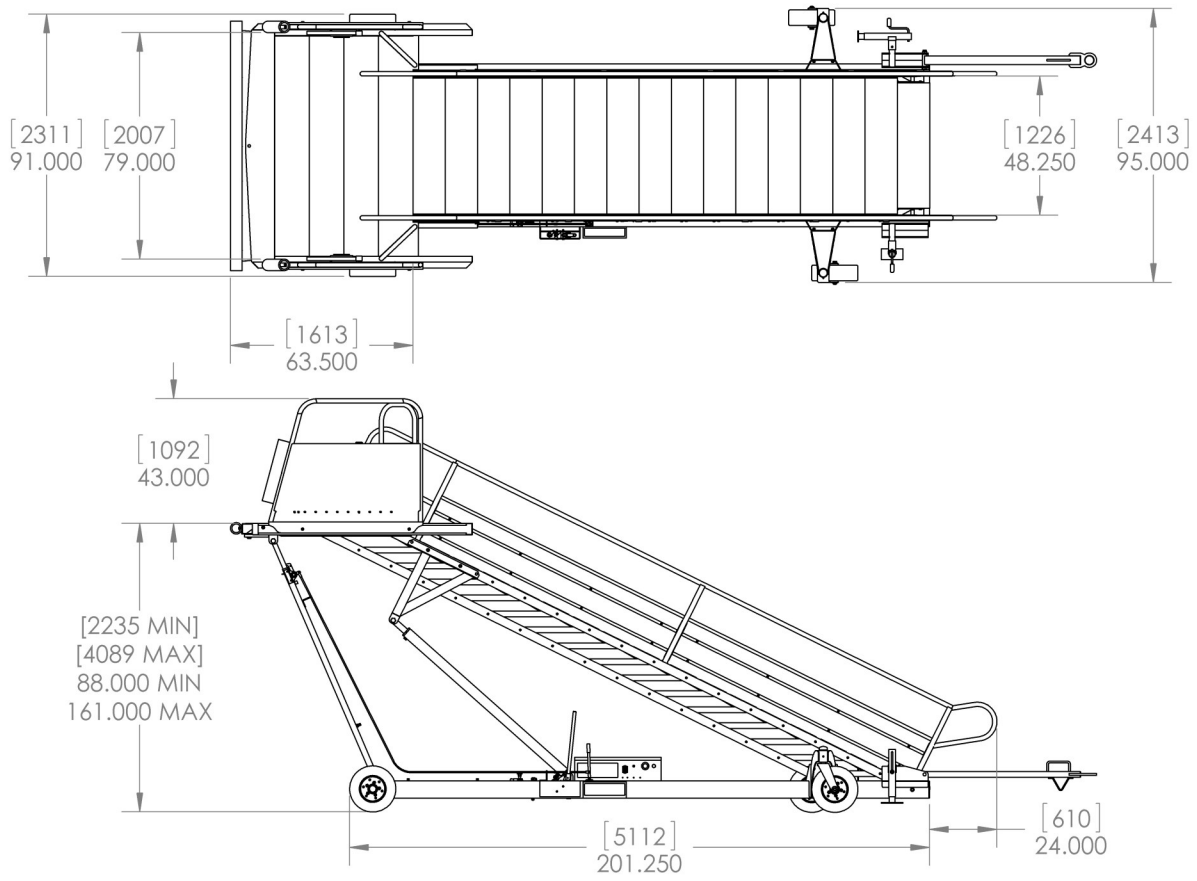

Services Aircraft: DC-9, MD80, B727, B737, B757, A318, A319, A320, A321

- Services various passenger door sill heights, 88” to 161”
- Platform capacity, 1,000 lbs. / full stairway capacity, 3,500 lbs.
- “Group 24” deep cycle battery

- Shipping Dimensions
- Weight - 3400 lbs.
- Length - 288”
- Width - 96”
- Height - 100”

CLYDE

Clyde Machines
P.O. Box 194
1150 Hwy 55 N.
Glenwood, MN 56334 USA
(320) 634-4504
(320) 634-4506 Fax

www.clydemachines.com